77104 - HOT SHOT SQUARED SPORTS LIGHT

120-277V 5000K 400W

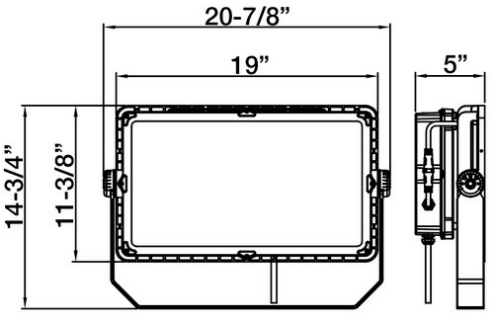

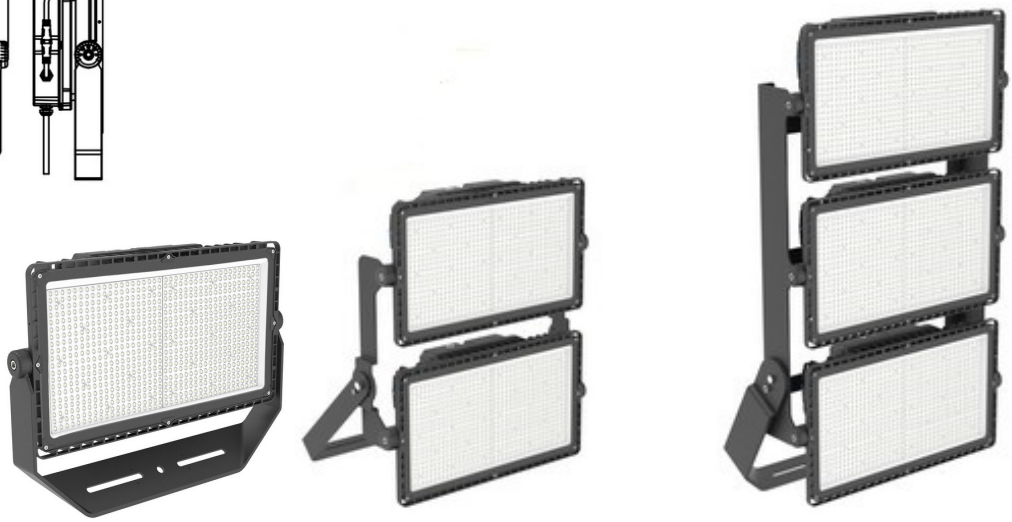

Optional configurations, bracket sold separately

FEATURES:

- Modular Sports Light
- Light Distribution: Type II
- Operation Temperature: –40°F - 113°F
- 50,000+ Hour LED Life Expectancy
- Housing Color: Black
- 5' Whip
- Direct Replacement for Metal Halide
- 10KV Surge Suppression
- IP65 Waterproof Rating
- Listings: cULus
- DLC PRODUCT ID#: S-2T5PQR
- 5 Year Warranty

Part#	Wattage	Voltage	Lumens	CCT	CRI	Dimming	Light Pattern	Lumens/ Watt	DLC PRODUCT ID#:
77104	400W	120-277V	54,503	5000K	>70	0-10V	Type II	136 lm/w	S-2T5PQR

77104 - HOT SHOT SQUARED SPORTS LIGHT

120-277V 5000K 400W

PHOTOMETRY

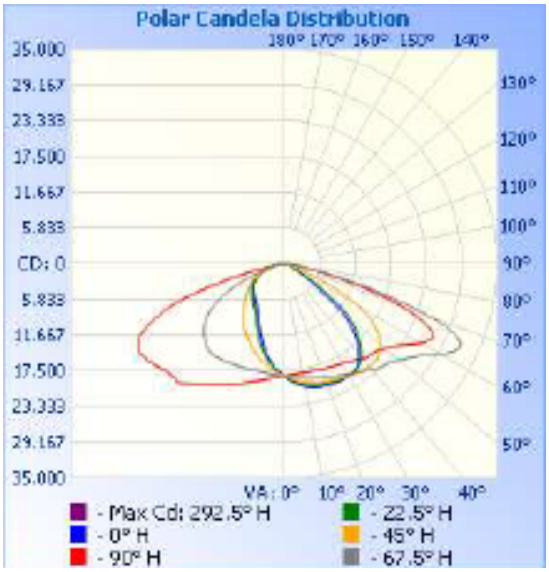

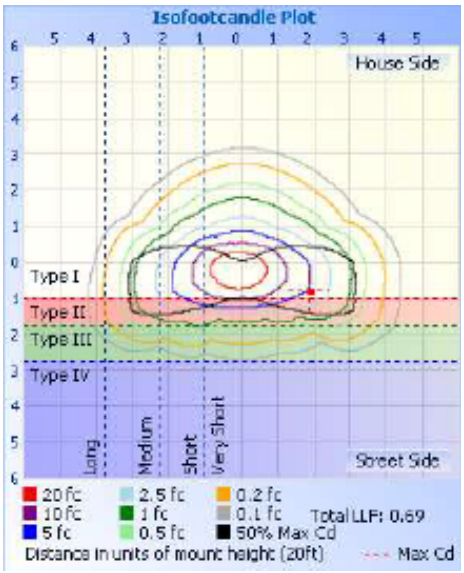

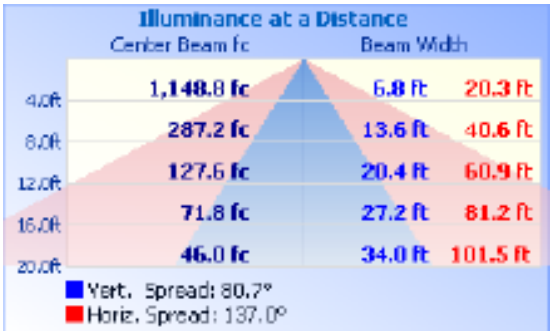

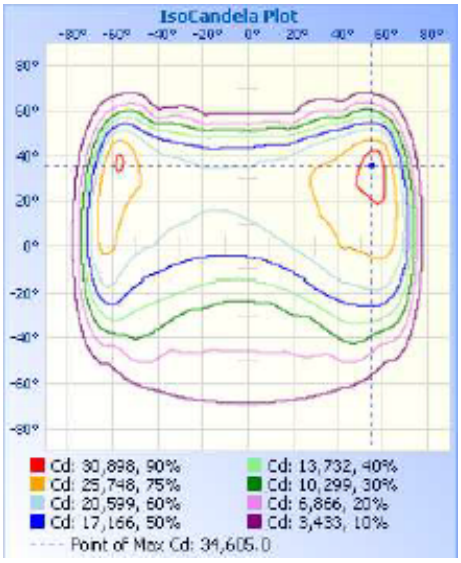

77104 - HOT SHOT SQUARED SPORTS LIGHT

120-277V 5000K 400W

Technical Specifications:

Electrical:

Input Voltage: 120-277V

Current: 1.99A @ 120V

Frequency: 60Hz

Power Factor: ≥0.99

THD: <15%

Product Parameters:

400 Watts

Lumens: 54,503

Efficacy: 136 Lumens Per Watt

50,000+ Hour LED Life Span

CCT: 5000K (Cool White)

Chromaticity Measurements:

Beam Angle: Type II

BUG Rating: B5-U4-G2

CRI: >70

Component Specifications:

LED: SMD3030

Driver: 120-277V 50-60HZ

10,000KV Surge Protection

Dimming: 0-10V

Operating Temperature:

Minimum Starting -40°F - 113°F

Construction:

Housing: Aluminum, Powder Coated

5' Whip Length

IP Rating: IP65

Lens Material: Polycarbonate

Mounting: Yoke (Bracket)

EPA: 2.46ft^2

Listings:
cULus
DLC PREMIUM PRODUCT ID#:
S-2T5PQR

Carton Qty: 1

Weight: 33 lbs

Warranty:
Morris Products carries a 5 year warranty from date of purchase against defects in materials and workmanship (assuming normal and proper usage).